Electrolux PROFESSIONAL

Standard Preparation 1200 mm Soaking Sink for Dishwasher with 1 Bowl

ITEM #

MODEL #

NAME #

SIS #

AIA #

133193 (NSBD1417R)	Sink Unit for Undercounter Dishwasher with 1 bowl 600x500x320mm and right hand drainer, 1400mm

Short Form Specification

Item No.

Made from 304 AISI stainless steel. The 50mm high worktop in 304 AISI stainless steel, 1mm in thickness, is sound-deadened and has an overflow rim and welded corners. Integral rear upstand, h=100mm, with 10mm radius. Allround apron. Square section legs 40x40mm on 1" height-adjustable feet (+/-20mm). Bowl mm600x500x300h with overflow pipe and 2"drain hole; right hand drainer. An undercounter dishwasher can be placed under the drainer.

APPROVAL:

Main Features

- Sturdiness, stability and reliability of table accurately tested.

Construction

- Sink tops easily slotted onto the legs and taps are easily installed from the rear.
- Square section legs and 40 mm height-adjustable feet in 304 AISI stainless steel.
- 100 mm upstand with 8 mm radioused corner and 13 mm deep, designed to be used against a wall.
- 50 mm worktop in 304 AISI stainless steel, 10/10 in thickness with overflow rim along the top.
- Bottom part of drain left free to house an undercounter dishwasher.
- Wide range of taps are available to suit every need.
- Drainage area suitable for drying operations
- 100 mm upstand with 10 mm radioused corner and 13 mm deep, designed to be used against a wall.

Optional Accessories

- Set of 4 wheels (2 with brake) d. 100mm for tables and sinks (total height on wheels= 993 mm) PNC 855150 ❑
- Elbow operated mixer tap with spout 3/4", single hole PNC 855322 ❑
- Elbow operated mixer tap with short spout 3/4", single hole PNC 855323 ❑
- Foot operated mixer tap (hot and cold) with spout 3/4" PNC 855328 ❑

Standard Preparation 1200 mm Soaking Sink for Dishwasher with 1 Bowl

Front

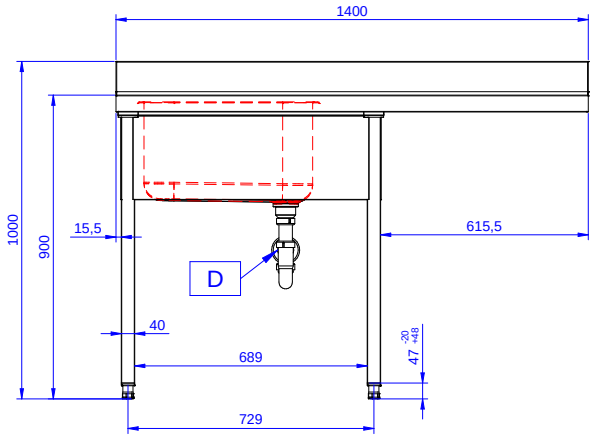

Side

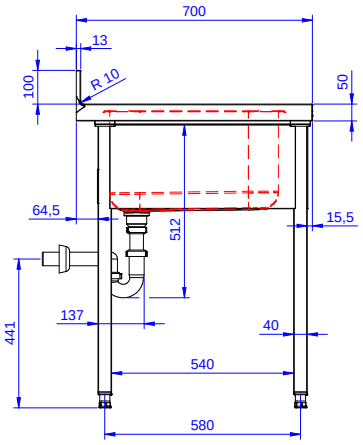

Top

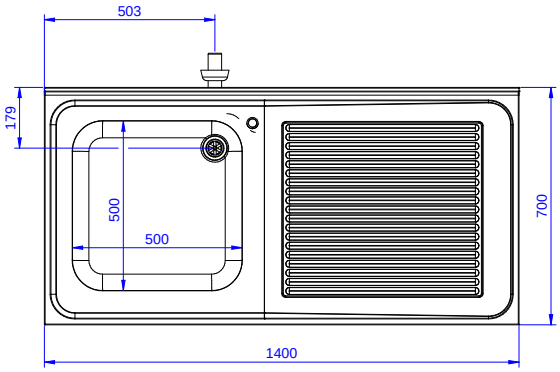

Key Information:

External dimensions, Width:	
133193 (NSBD1417R)	1400 mm
External dimensions, Depth:	700 mm
External dimensions, Height:	1000 mm
Upstand Dimensions, Height:	100 mm
Upstand Dimensions, Depth:	13 mm
Upstand Dimensions, Radius:	R=12
Bowls number	1
Bowl dimensions	500x500xH320
Net weight:	37.4 kg

The company reserves the right to make modifications to the products without prior notice. All information correct at time of printing.

2024.10.09